（可不同顏色處理&復雜成型加工）
(different colors treatment & complex forming procesing available)
（多色处理&複雜成型加工可）

可定制任意形狀個性化的手柄及大小
Any shape of personalized handle and size can be customized

依要求可定制超大扭力型
We can do super-big torque as customers require

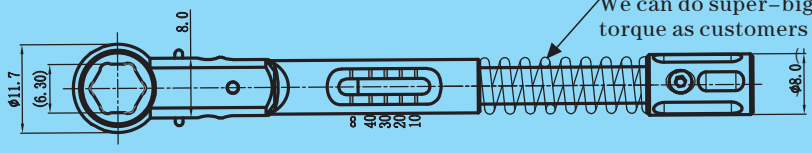

（可依圖依樣加工任意尺寸公差及形狀的內孔方式，也可單獨定制）

(We could produce inner hole of any sizes, tolerances or geometrical shapes according to customers' drawings or samples)

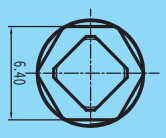

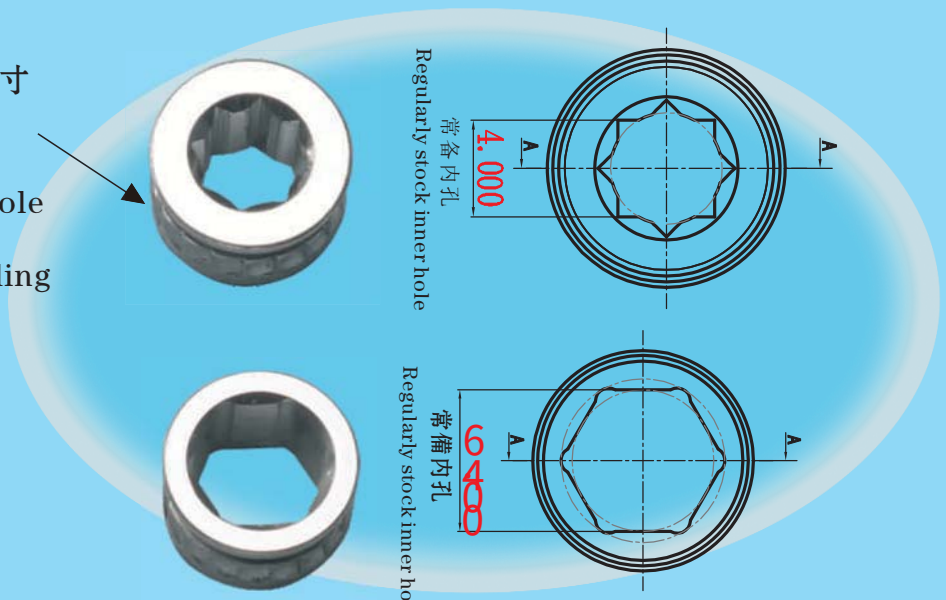

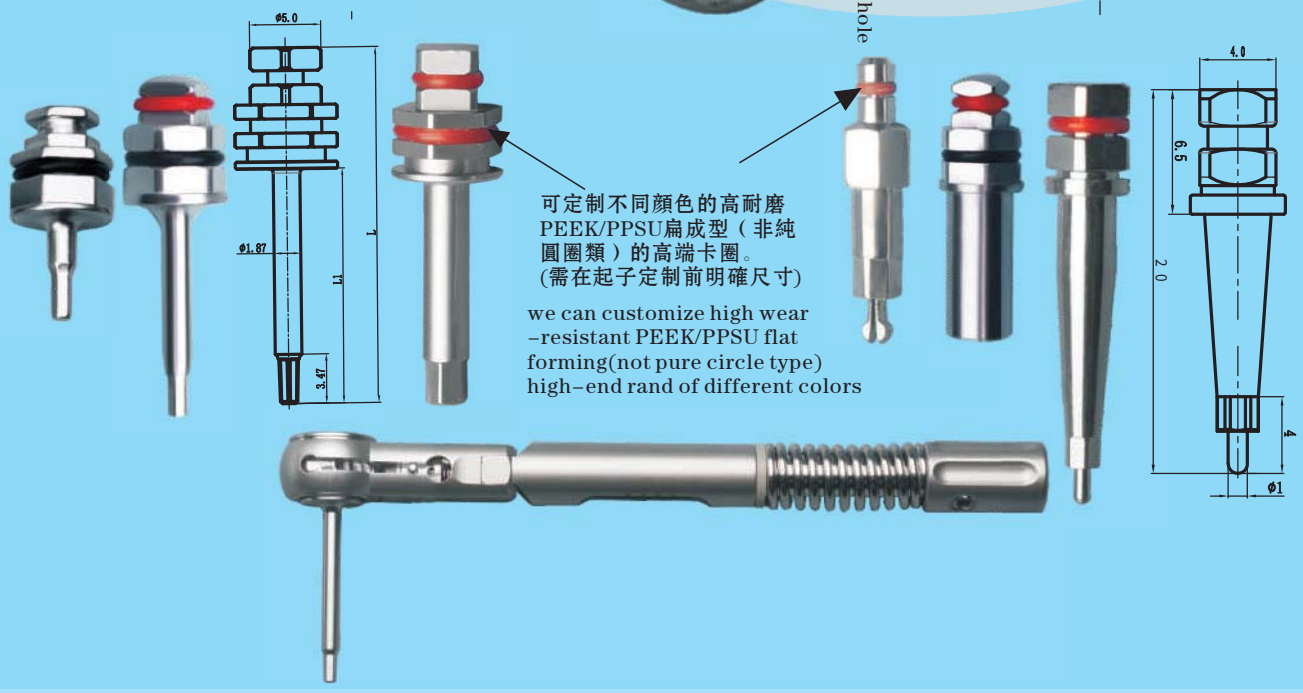

可定制不同顏色的高耐磨PEEK/PPSU扁成型（非純圓圈類）的高端卡圈。
(需在起子定制前明確尺寸)

we can customize high wear-resistant PEEK/PPSU flat forming(not pure circle type) high-end rand of different colors

★ 超高防銹高硬度高耐磨、高剛性、高抗衝擊、高韌性不銹鋼、鈦、鈦合金等高精密、超細、超長、超硬加工成型。
Ultra-high rust-resistant, high-hardness, high-wear-resistant, high-rigidity, high-impact-resistant & high-toughness stainless steel, titanium, titanium alloy, etc., with high-precision, ultra-fine, ultra-long, super-hard machine shaping.